novanni®
COMMERCIAL

7003–☐☐
7003/316–☐☐

See Hole Drillings Below for Options

Fixture #

SPECIFICATIONS:
Double bowl scullery sink, radius coved bowl corners, exposed surfaces finished to a satin finish. Adjustable bullet feet. Integral backsplash. Three rolled edges.

OVERALL DIMENSIONS:

Left to Right:	44” (112cm)
Front to Back:	27” (69cm)
Backsplash:	8” (20cm)

BOWL DIMENSIONS:

Left to Right:	17 1/2” (44cm)
Front to Back:	19 1/2” (50cm)
Bowl depth:	14 1/2” (37cm)

MATERIAL:
16 gauge, 18-10 stainless steel
304 or 316 Series

WASTE:
3 1/2” basket strainer assemblies with tailpieces included
Location: Center

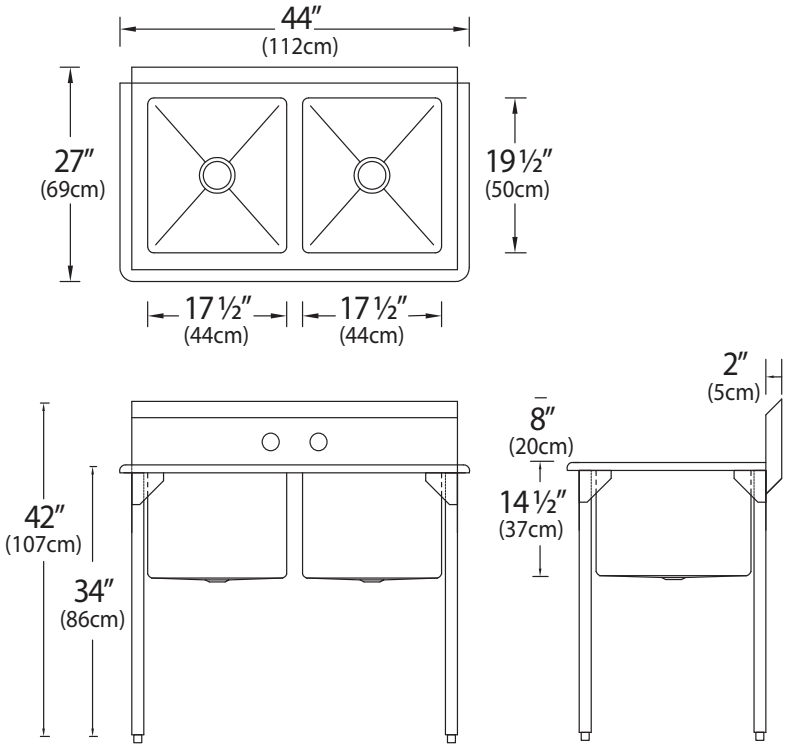

HOLE DRILLINGS

	Hole Configuration	# to enter above		Check hole selection
	2 hole, 8” (20cm) centre	2	8	☐
†	Special Holes (drawing must be included)	S	H	☐

† *Indicates custom product and is Non-returnable*

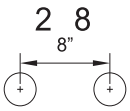

PROJECT INFORMATION:
Item Location:_____
Project Number:_____
Project Name:_____
Quote Number:_____
Faucet Model:_____
Notes:_____

Engineer’s Approval

Novanni has a policy of continuous improvement.
All product specifications may change without notice.

Novanni Stainless Inc., 2978 Southorn Rd., P.O. Box 189 Coldwater, ON L0K 1E0
Tel: 1-800-661-1795 • Fax: 1-800-361-2176 • www.novanni.ca

Printed in Canada. NOVSS-C0714